SELF-ACTING TEMPERATURE REGULATORS
TR40

DESCRIPTION

The TR40 series of temperature regulators were designed for direct acting temperature control systems where the valve closes on temperature rise. They are single seated, unbalanced and intended to be coupled with T series thermostat models T.205 and T.405. The liquid filling the thermostat expands when the temperature of the fluid being heated rises, closing the valve.
These valves are used for controlling temperature in central and district heating systems, heat exchangers and other HVAC and industrial applications.

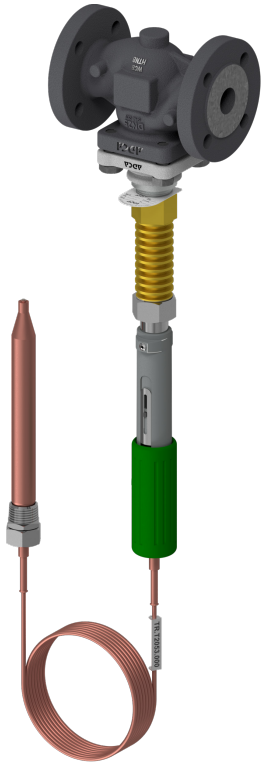

MAIN FEATURES

Easily adjustable temperature range.
Proportional temperature control.
Single seated, two way, direct acting valve.
Built-in strainer.
Narrow thermostat neutral zone (1,5 to 2,5 ºC).
No special tools required for servicing.
Stuffing box is an integral part of the thermostatic element, allowing easy and simple maintenance of the valve.

OPTIONS:	PK sensor pocket. K1 cooling unit. Diffferent capillary lenghts. Other thermostats on request.
USE:	Saturated and superheated steam. Hot and superheated water.
AVAILABLE VALVES:	TR40S – carbon steel. TR40SS – stainless steel.
AVAILABLE THERMOSTATS:	T.205 – 400 N (max. closing force). T.405 – 500 N (max. closing force).
SIZES:	DN 15 to DN 25.
CONNECTIONS:	Flanged EN 1092-1 PN 40.
THERMOSTAT RANGES:	T.205: 0 – 60 ºC, 30 – 90 ºC and 60 – 120 ºC. T.405: 0 – 120 ºC and 40 – 160 ºC.
INSTALLATION:	Horizontal installation with the thermostat in the vertical position, in order to reduce wear. In case of medium temperatures up to 150 ºC, the thermostat may be fitted below or above the valve. In case of medium temperatures between 150 and 250 ºC, a cooling unit type K1 has to be applied with the connection pointing downwards. A “Y” strainer should be installed upstream of the valve. See IMI – Installation and maintenance instructions.

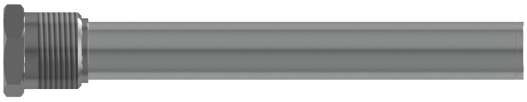

PK sensor pocket

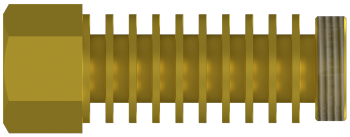

K1 cooling unit

We reserve the right to change the design and material of this product without notice.

BODY LIMITING CONDITIONS *		
TR40S	TR40SS	RELATED TEMPERATURE
ALLOWABLE PRESSURE	ALLOWABLE PRESSURE	
40 bar	40 bar	-10 ºC / 50 ºC
40 bar	33,7 bar	200 ºC
35,2 bar	29,7 bar	300 ºC
32,3 bar	28,5 bar	350 ºC
29,5 bar	27,4 bar	400 ºC

* Rating according to EN 1092-1:2018;
Minimum operating temperature: -10 ºC.

TR40 – T SERIES THERMOSTATS – FTO, UNBALANCED TRIM, METAL SEALING (CLASS IV)						
TYPE	SIZE	SEAT Ø	Kvs (m^3/h)	STROKE	MAX. PERMISSIBLE PRESSURE DROP	
					T.205	T.405
TR40 – 15/4	DN 15	4 mm	0,2	6 mm	40 bar	40 bar
TR40 – 15/6	DN 15	6 mm	0,45	6 mm	40 bar	40 bar
TR40 – 15/9	DN 15	9 mm	0,95	6 mm	38 bar	40 bar
TR40 – 15/12	DN 15	12 mm	1,7	6 mm	24 bar	33 bar
TR40 – 15/15	DN 15	15 mm	2,75	6 mm	15 bar	20 bar
TR40 – 20/9	DN 20	9 mm	0,95	6,5 mm	38 bar	40 bar
TR40 – 20/15	DN 20	15 mm	2,75	6,5 mm	15 bar	20 bar
TR40 – 20/20	DN 20	20 mm	5	6,5 mm	9 bar	12 bar
TR40 – 25/20	DN 25	20 mm	5	7 mm	9 bar	12 bar
TR40 – 25/25	DN 25	25 mm	7,5	7 mm	4,7 bar	6 bar

PROPORTIONAL BAND

The proportional band is the temperature change required for the valve to move from its fully open to fully closed position. It depends on the valve stroke (mm) and on the thermostat movement per ºC (mm/ºC), and is calculated as follows:

$$\text{Proportional band} = \frac{\text{Valve stroke (mm)}}{\text{Thermostat movement (mm/ºC)}}$$

Thermostat movement for T.205 and T.405: 0,5 mm/ºC.
A proportional band between 8 ºC and 13 ºC is suitable for most applications. A smaller proportional band is not ideal when heat loads vary rapidly.

DIMENSIONS – THERMOSTAT (mm)					
TYPE	A	B	C	ØE	WEIGHT (kg)
T.205	305	405	210	22	1,8
T.405	385	525	390	22	2,6

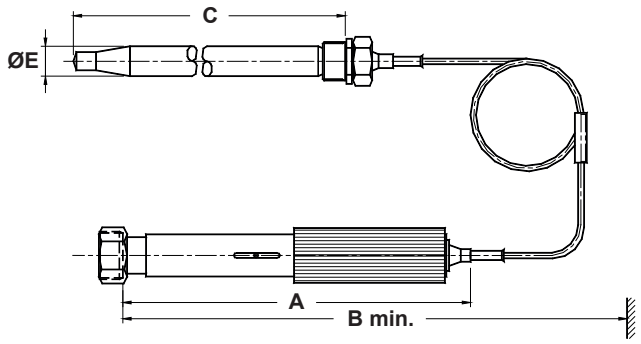

We reserve the right to change the design and material of this product without notice.

DIMENSIONS – VALVE BODY (mm)				
SIZE	**A**	**B**	**C**	**WEIGHT (kg)**
DN 15	130	48	115	4,8
DN 20	150	53	115	4,9
DN 25	160	58	120	5,9

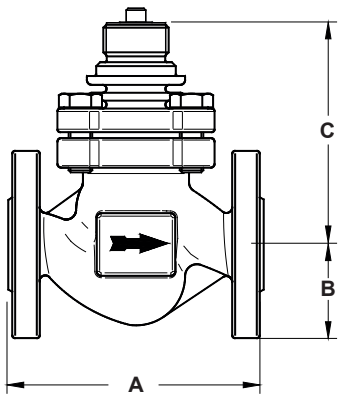

MATERIALS			
POS. Nº	**DESIGNATION**	**TR40S**	**TR40SS**
1	Body	A216 WCB/1.0619; GP240GH / 1.0619	CF8M / 1.4408
2	Bonnet	CK45 / 1.1191	CF8 / 1.4308
3	* Gasket	St. steel / Graphite	St. steel / Graphite
4	* Valve plug	AISI 316 / 1.4401	AISI 316 / 1.4401
5	Seat	AISI 316 / 1.4401	AISI 316 / 1.4401
6	* Spring	AISI 302 / 1.4300	AISI 302 / 1.4300
7	Guide	AISI 316 / 1.4401	AISI 316 / 1.4401
8	Washer	AISI 304 / 1.4301	AISI 304 / 1.4301
9	Bolts	Steel 8.8	St. steel A2-70

* Available spare parts.

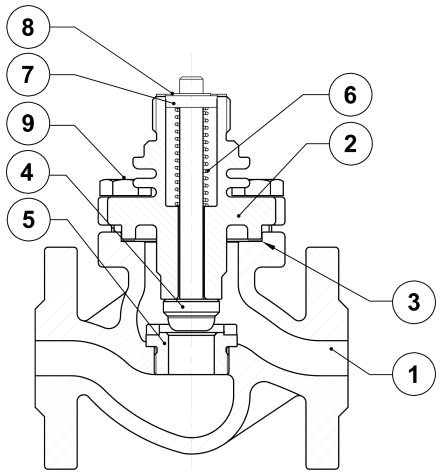

K1 COOLING UNITS

Cooling units are used as a means of protection for the stuffing box when dealing with high temperatures.
The K1 cooling unit should always be applied when medium temperatures are between 150 ºC and 250 ºC.
For higher temperatures as well as for all hot oil systems please consult.

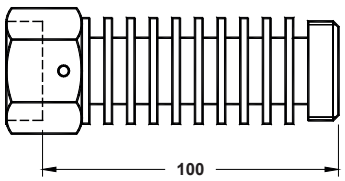

PK SENSOR POCKETS

Sensor pockets made of stainless steel can be supplied with all TR series self-acting thermostats using rod sensors.
A sensor pocket, also called thermowell, is used to protect the sensor and to allow its removal while the plant is running or, e.g., the tank where it is connected to is full.
The use of sensor pockets implies delay of heat transfer to the rod sensors and, thus, a longer thermostat reaction time. This is, to some extent, counteracted by filling up the sensor pockets with a thermal conductive paste or glycerine.

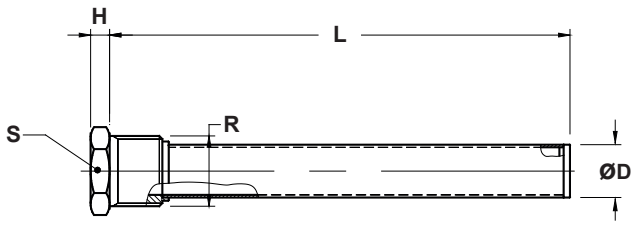

INSTALLATION

The installation site for the sensor pocket is arbitrary when paste is applied. When glycerine is used, the sensor pocket must point at least slightly downwards.

MATERIAL

AISI 316 / 1.4401.

DIMENSIONS (mm)					
TYPE	**ØD**	**H**	**L**	**S**	**R**
PK2	25	9	218	36	1"
PK4	25	10	390	45	11/4"

We reserve the right to change the design and material of this product without notice.