LRQA CERTIFIED ISO 9001

BELLOWS SEALED STOP VALVES
VF40

DESCRIPTION

The VF40 is a series of maintenance free inline stop valves designed with double wall bellow sealing, secondary safety packing and non-rising handwheel. They are specially recommended for steam, gas, liquid, condensate, thermal oil and water applications.

MAIN FEATURES

Maintenance free design.
High durability sealing via double wall bellows.
Secondary safety packing.
Non-rising handwheel.
External stem thread.

OPTIONS: Parabolic plug for throttling applications.

USE: Group 2 fluids compatible with the construction.

AVAILABLE MODELS: VF40S – carbon steel.
VF40i – stainless steel.

SIZES: DN 15 to DN 150.

CONNECTIONS: Flanged EN 1092-1 PN 40.
Others on request.

INSTALLATION: See IMI – Installation and maintenance instructions.

CE MARKING – GROUP 2 (PED – European Directive)	
PN 40	**Category**
DN 15 to 32	SEP
DN 40 to 100	1 (CE marked)
DN 125 to 150	2 (CE marked)

BODY LIMITING CONDITIONS		
VF40S	**VF40i**	**RELATED TEMPERATURE**
ALLOWABLE PRESSURE	**ALLOWABLE PRESSURE**	
40 bar	40 bar	- 10 / 50 ºC
37,4 bar	40 bar	100 ºC
33,6 bar	35,8 bar	200 ºC
27,8 bar	32,5 bar	300 ºC

Remark: Lower temperature limits on request.

FLOW RATE COEFFICIENTS (m^3/h)											
SIZE	**DN 15**	**DN 20**	**DN 25**	**DN 32**	**DN 40**	**DN 50**	**DN 65**	**DN 80**	**DN 100**	**DN 125**	**DN 150**
Kvs	4,3	7	11	17,5	27	47	68	116	162	250	364

For conversion Kvs = Cv (US) x 0,855.

We reserve the right to change the design and material of this product without notice.

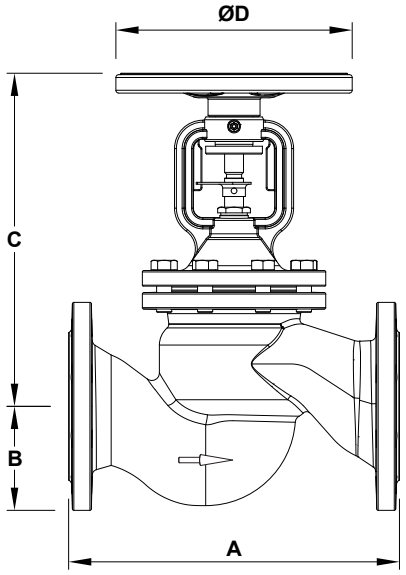

DIMENSIONS (mm)					
SIZE	**A**	**B**	**C**	**ØD**	**WEIGHT (kg)**
DN 15	130	47,5	189	120	4,3
DN 20	150	52,5	189	120	5,1
DN 25	160	57,5	189	120	5,8
DN 32	180	70	220	160	9,5
DN 40	200	75	220	160	9,8
DN 50	230	82,5	295	195	17,5
DN 65	290	92,5	295	195	20,5
DN 80	310	100	368	280	34
DN 100	350	117,5	368	280	44
DN 125	400	135	523	350	77
DN 150	480	150	523	350	110

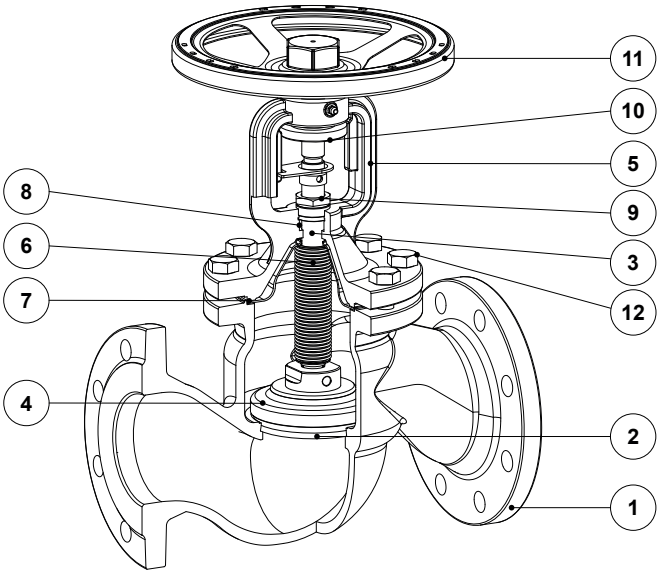

MATERIALS		
POS. Nº	**DESIGNATION**	**MATERIAL**
1	Body (VF40S)	GP240GH / 1.0619
	Body (VF40i)	A351 CF10MC / 1.4581
2	Seat	Stainless steel
3	* Spindle	Stainless steel
4	* Disc	Stainless steel
5	Bonnet	GP240GH / 1.0619
6	* Bellows	Stainless steel
7	* Gasket	Stainless steel / Graphite
8	* Packing	Graphite
9	Gland nut	Zinc plated steel
10	Anti-friction disc	Zinc plated steel
11	Handwheel	Cast iron
12	Bolt	Stainless steel A2-70

* Available spare parts.

We reserve the right to change the design and material of this product without notice.